Cambridge Assessment International Education

Cambridge IGCSE™

PHYSICS **0625/22**

Paper 2 Multiple Choice (Extended) **February/March 2020**

45 minutes

You must answer on the multiple choice answer sheet.

You will need: Multiple choice answer sheet
Soft clean eraser
Soft pencil (type B or HB is recommended)

INSTRUCTIONS

- There are **forty** questions on this paper. Answer **all** questions.
- For each question there are four possible answers **A**, **B**, **C** and **D**. Choose the **one** you consider correct and record your choice in soft pencil on the multiple choice answer sheet.
- Follow the instructions on the multiple choice answer sheet.
- Write in soft pencil.
- Write your name, centre number and candidate number on the multiple choice answer sheet in the spaces provided unless this has been done for you.
- Do **not** use correction fluid.
- Do **not** write on any bar codes.
- You may use a calculator.
- Take the weight of 1.0 kg to be 10 N (acceleration of free fall = 10 m / s^2).

INFORMATION

- The total mark for this paper is 40.
- Each correct answer will score one mark. A mark will not be deducted for a wrong answer.
- Any rough working should be done on this question paper.

This document has **20** pages. Blank pages are indicated.

IB20 03_0625_22/5RP
© UCLES 2020

[Turn over

www.root19.com +91 - 9969 353 391

1 The diagram shows a rectangular metal sheet close to two rulers.

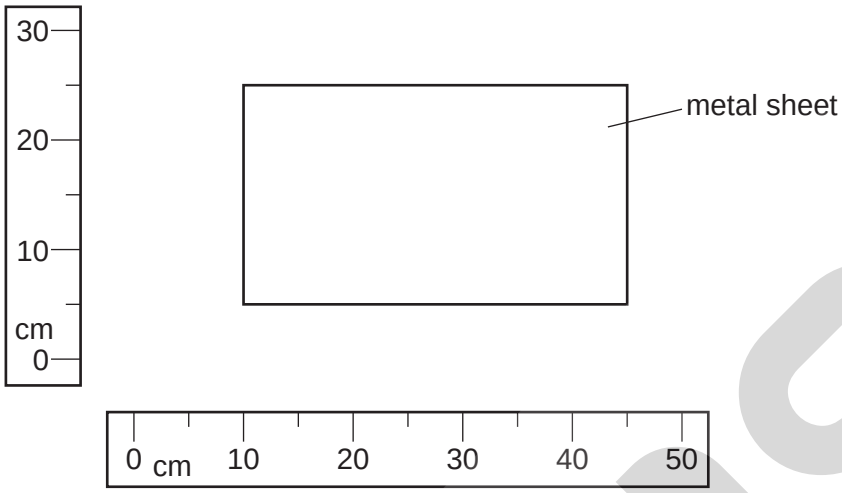

What is the area of the metal sheet?

A 700 cm^2 **B** 875 cm^2 **C** 900 cm^2 **D** 1125 cm^2

2 A ball falls from rest through the air towards the ground. The diagram shows two forces acting on the ball.

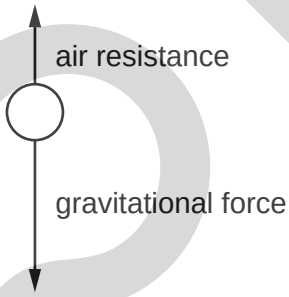

As the ball falls, the air resistance increases.

Which statement is correct?

A The acceleration of the ball decreases.

B The acceleration of the ball increases.

C The speed of the ball decreases.

D The gravitational force on the ball decreases.

© UCLES 2020
www.root19.com

+91 - 9969 353 391

3 A compressed spring projects a ball horizontally in a vacuum chamber.

On the Earth, the ball reaches the chamber floor 4.0 m in front of the spring.

An identical experiment is done on the Moon. The gravitational field strength is lower on the Moon than on the Earth.

The experimental results on the Moon are compared with those on the Earth.

Which statement is correct?

A The horizontal speed is greater on the Moon and the ball hits the floor 4.0 m in front of the spring.

B The horizontal speed is greater on the Moon and the ball hits the floor more than 4.0 m in front of the spring.

C The horizontal speed is the same on the Moon and the ball hits the floor 4.0 m in front of the spring.

D The horizontal speed is the same on the Moon and the ball hits the floor more than 4.0 m in front of the spring.

4 Diagram 1 shows a piece of flexible material that contains many pockets of air. Diagram 2 shows the same piece of flexible material after it has been compressed so that its volume decreases.

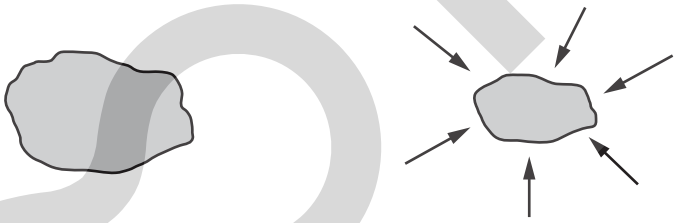

diagram 1 (before compression) diagram 2 (after compression)

What happens to the mass and to the weight of the flexible material when it is compressed?

	mass	weight
A	increases	increases
B	increases	no change
C	no change	increases
D	no change	no change

© UCLES 2020
www.root19.com

+91 - 9969 353 591

5 The graph shows how the strength of the Earth's gravitational field varies as the distance from the Earth's surface increases.

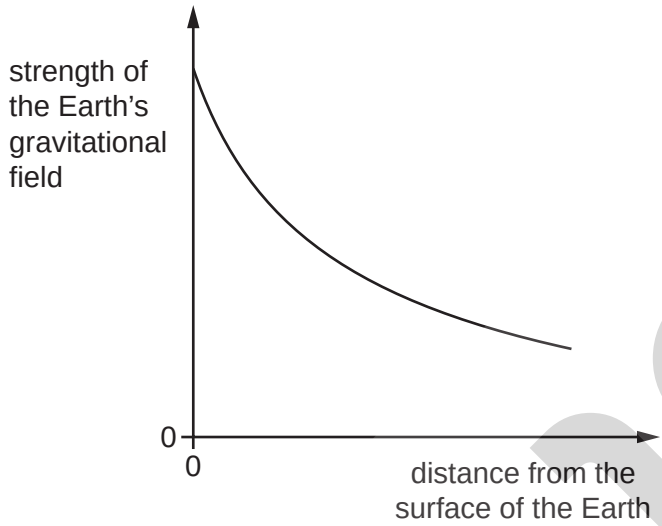

Which row describes the effect that this has on the mass and on the weight of an object as it moves further away from the Earth's surface?

	mass of object	weight of object
A	decreases	decreases
B	decreases	unchanged
C	unchanged	decreases
D	unchanged	unchanged

6 A measuring cylinder contains 40 cm^3 of water.

A solid metal ball is dropped into the water and the water level rises to 56 cm^3.

The mass of the ball is 80 g.

What is the density of the metal from which the ball is made?

A 0.20 g/cm^3 **B** 1.4 g/cm^3 **C** 2.0 g/cm^3 **D** 5.0 g/cm^3

www.root19.com +91 - 9969 353 391

7 A car travels along a horizontal road at constant speed. Three horizontal forces act on the car. The diagram shows two of these forces.

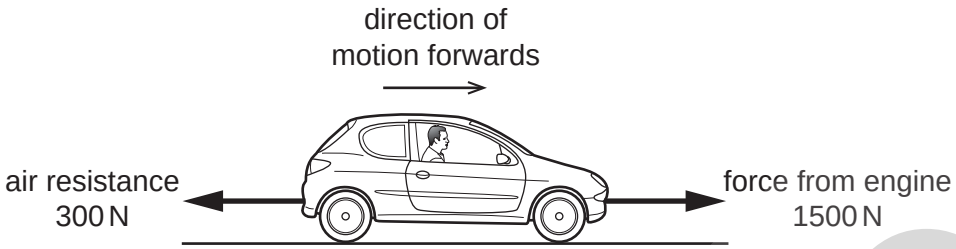

What is the size and the direction of the third horizontal force acting on the car?

A 1200 N backwards

B 1200 N forwards

C 1800 N backwards

D 1800 N forwards

8 A car is driven round a bend in the road at a constant speed.

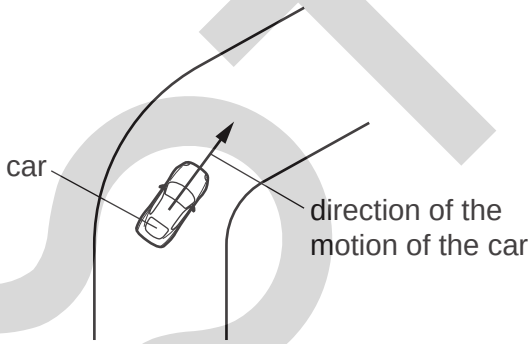

What is the direction of the resultant force on the car when it is going round the bend?

A parallel to the motion and in the same direction as the motion

B parallel to the motion and in the opposite direction to the motion

C perpendicular to the motion and towards the inside of the bend

D perpendicular to the motion and towards the outside of the bend

© UCLES 2020
www.root19.com

+91 - 9969 353 591

9 An athlete with mass 70 kg trains by performing press-ups with a load on his back. The diagram shows the perpendicular distances involved.

The centre of mass of the athlete is C_M and the centre of mass of the load he is carrying is C_L.

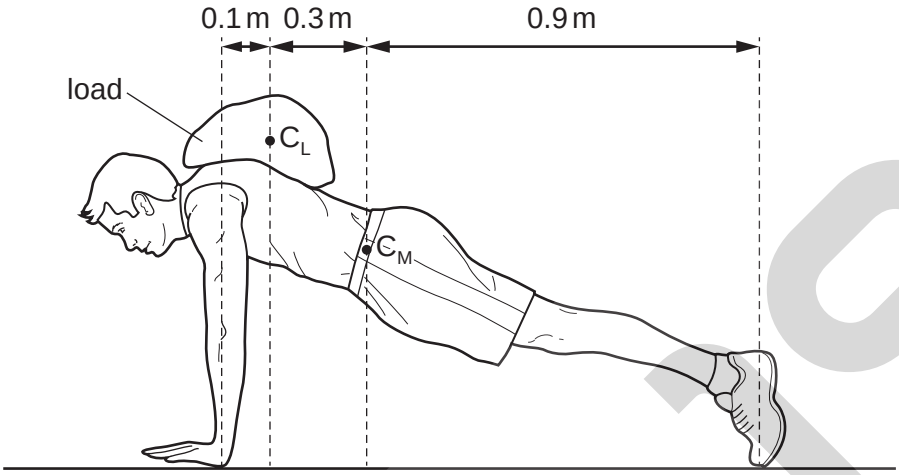

The mass of the load is 6.0 kg.

What is the upward force exerted by his two arms?

A 54 N **B** 76 N **C** 540 N **D** 760 N

10 An air pistol fires a pellet forwards.

What is the motion of the air pistol?

A The air pistol moves backwards with speed greater than the pellet.

B The air pistol moves backwards with speed less than the pellet.

C The air pistol moves forward with speed greater than the pellet.

D The air pistol moves forward with speed less than the pellet.

11 Which row describes an advantage and a disadvantage of wind turbines?

	advantage	disadvantage
A	no fuel needed	harmful gases released
B	variable supply	fuel needed
C	no harmful gases released	variable supply
D	constant supply	noisy

12 An electric motor provides 900 J of useful output energy. The efficiency of the motor is 60 %.

How much electrical energy is supplied to the motor?

A 15 J **B** 540 J **C** 1500 J **D** 5400 J

www.root19.com +91 - 9969 353 391

13 A crane takes 2.0 minutes to lift a 500 kg load to the top of a building that is 12 m high.

What is the useful power developed against gravity by the crane?

A 21 W **B** 50 W **C** 500 W **D** 30 000 W

14 A skier is standing still on a flat area of snow.

The weight of the skier is 550 N. The total area of his skis in contact with the ground is 0.015 m^2.

What is the pressure exerted on the ground by the skier?

A 0.83 N/m^2 **B** 8.3 N/m^2 **C** 3700 N/m^2 **D** 37 000 N/m^2

© UCLES 2020
www.root19.com

+91 - 9969 353 591

15 A tall cylinder is partly filled with two liquids which do not mix. The two liquids have different densities. A student measures the pressure due to the liquids at different depths.

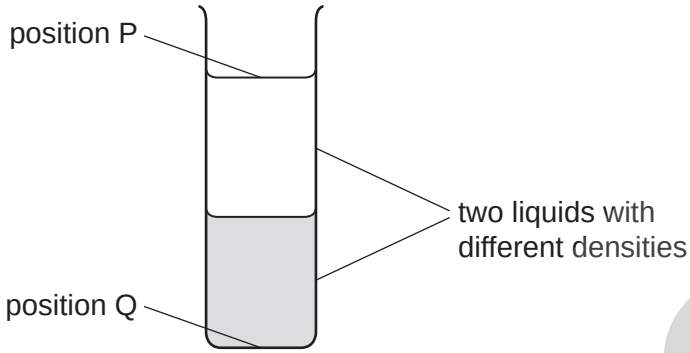

Which graph shows how the liquid pressure varies between positions P and Q?

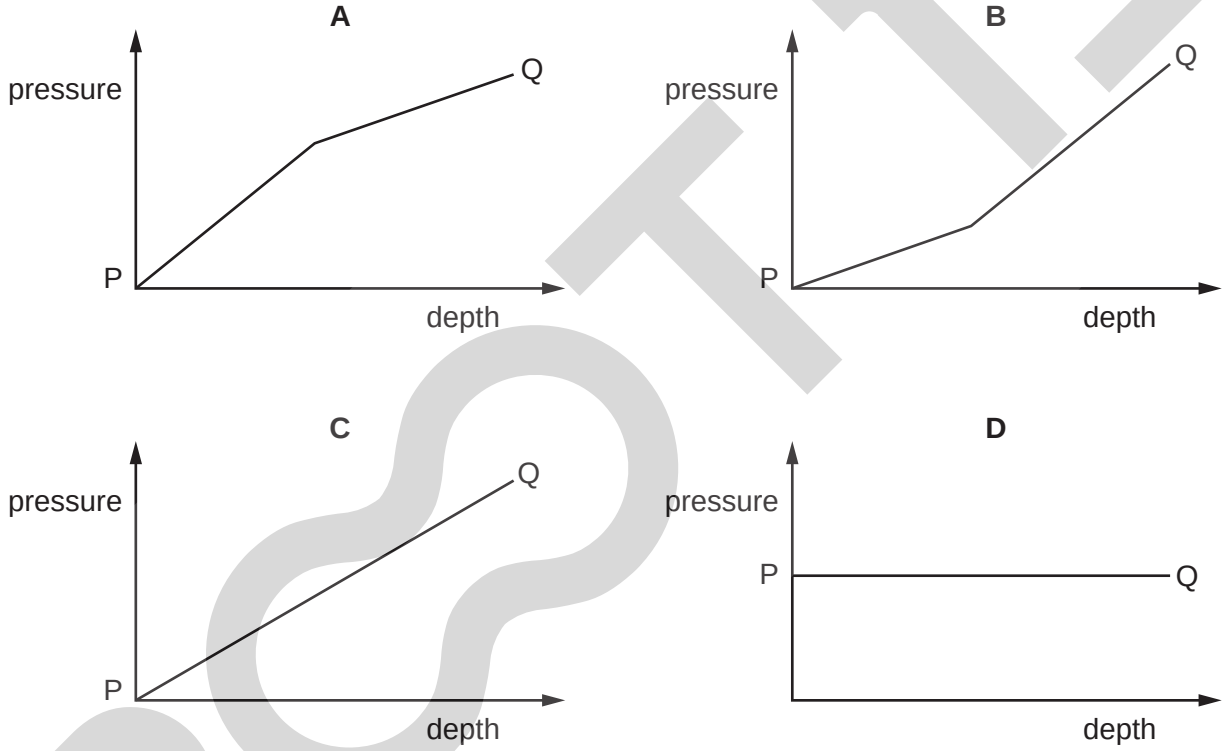

16 When pollen grains in water are viewed through a microscope, they are seen to be in continuous, rapid random motion.

What causes a pollen grain to move in this way?

A convection currents in the water

B bombardment by a single molecule of water

C uneven bombardment on different sides by water molecules

D collision with another pollen grain due to their kinetic energies

www.root19.com +91 - 9969 353 391

17 A student measures the mass of warm water in an open container over two minutes. The container is kept at a constant temperature. The results are in the table.

time / minutes	mass / g
0.0	33.9
0.5	30.6
1.0	27.6
1.5	24.9
2.0	22.5

Why does the mass of the water change?

A The water evaporates.

B The water freezes.

C The water condenses.

D The water boils.

18 Which points are the fixed points of the liquid-in-glass thermometer shown?

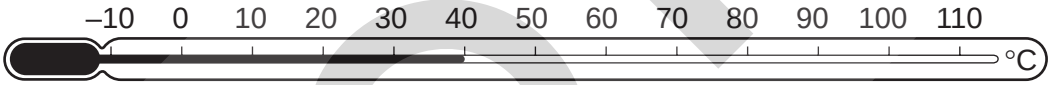

A the beginning and end points of the column of liquid

B the points marked –10 °C and 110 °C

C the points marked 0 °C and 100 °C

D the top and bottom points of the thermometer bulb

www.root19.com +91 - 9969 353 591

19 The specific heat capacities of aluminium, iron, ethanol and water are given.

substance	specific heat capacity J / kg °C
aluminium	900
iron	450
ethanol	2400
water	4200

1 kg of each metal is put into 5 kg of each liquid.

The starting temperature of each metal is 60 °C. The starting temperature of each liquid is 10 °C.

Which example has the highest final temperature?

	metal	liquid
A	aluminium	ethanol
B	iron	ethanol
C	aluminium	water
D	iron	water

20 Metals are good thermal conductors.

Insulators are poor thermal conductors.

Which description of the mechanism of thermal conductivity is correct?

A In insulators, conduction takes place by electron transfer and molecular vibrations.

B In insulators, conduction takes place by electron transfer only.

C In metals, conduction takes place by electron transfer and molecular vibrations.

D In metals, conduction takes place by electron transfer only.

© UCLES 2020
www.root19.com

+91 - 9969 353 391

21 A teacher shows his class a polystyrene cup. The cup is made from thick plastic with lots of tiny air bubbles in it.

He asks the class why the cup is so good at keeping a hot drink warm. Three suggestions are made.

1 It contains air which is a poor thermal conductor.

2 The air is trapped in tiny bubbles so very little convection is possible.

3 The plastic is a poor thermal conductor.

Which suggestions are correct?

A 1 and 2 only **B** 1 and 3 only **C** 2 and 3 only **D** 1, 2 and 3

22 A boy jumps into an indoor swimming pool. He notices that the water appears to get colder as he goes deeper underwater. This is due to convection.

Which statement is correct?

A Cold water is more dense than warm water so it sinks to the bottom of the pool.

B Warm water is more dense than cold water so it rises to the surface of the pool.

C The molecules in cold water have more kinetic energy than the molecules in warm water so they move to the bottom of the pool faster.

D The molecules in warm water are closer together than the molecules in cold water so they rise to the surface of the pool.

23 Four students **A**, **B**, **C** and **D**, investigate the diffraction of water waves through a gap.

Each student uses a different gap size and a different wavelength for the water waves.

Which student produces the waves which have the most diffraction?

	gap size / cm	wavelength / cm
A	2.0	1.8
B	3.0	2.1
C	4.0	2.0
D	5.0	0.9

www.root19.com +91 - 9969 353 591

24 The diagrams show examples of wave motion.

1

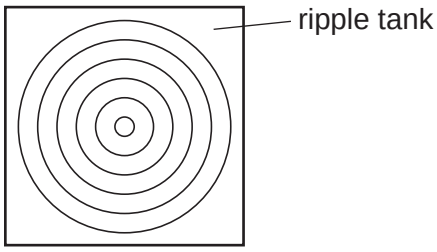

waves on water

2

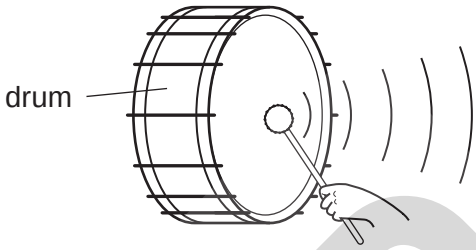

waves in air

3

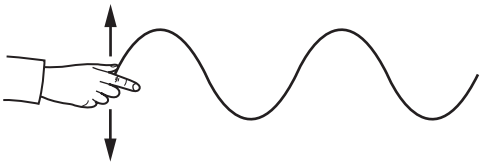

waves on a rope

4

waves in a spring

Which waves are longitudinal?

A 1 only **B** 2 and 3 only **C** 2, 3 and 4 **D** 2 and 4 only

© UCLES 2020 www.root19.com

+91 - 9969 353 391

25 Which diagram shows how the light from a candle is reflected by a mirror, and shows the position of the image formed?

A

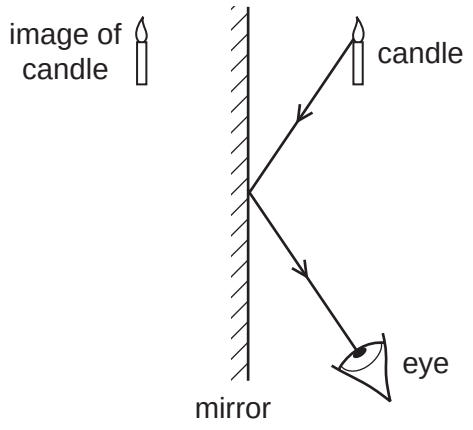

B

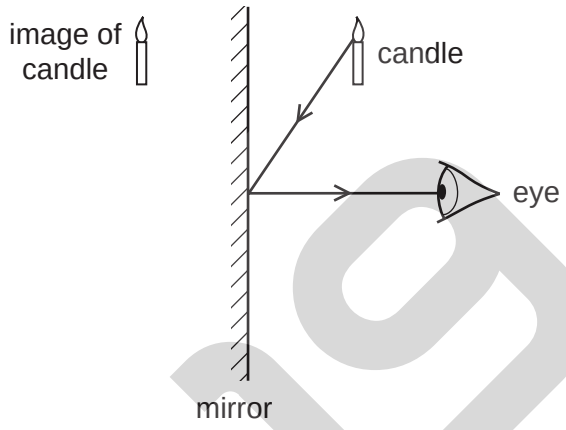

C

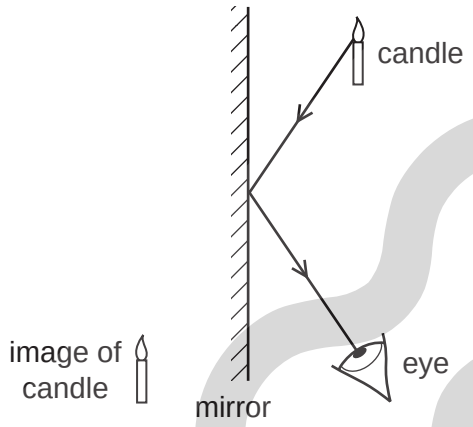

D

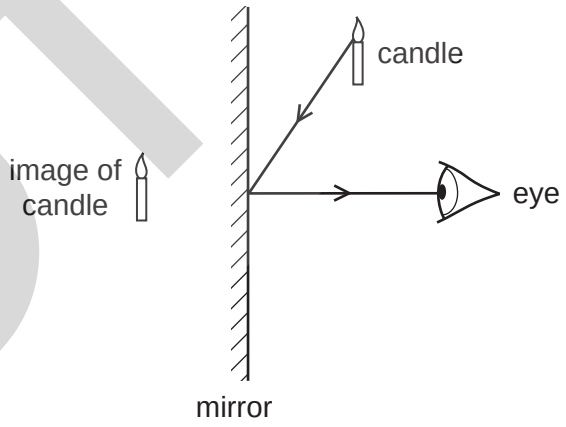

26 A converging lens can be used as a magnifying glass.

What will be the nature of the image?

A real, inverted, diminished

B real, upright, enlarged

C virtual, inverted, enlarged

D virtual, upright, enlarged

www.root19.com +91 - 9969 353 591

27 The wavelength of blue light changes from 4.7×10^{-7} m to 3.5×10^{-7} m as it passes from air to water.

What is the speed of this light in water?

A 7.4×10^{7} m/s

B 1.3×10^{8} m/s

C 2.2×10^{8} m/s

D 3.0×10^{8} m/s

28 The diagram shows compressions and rarefactions in air as a sound wave moves from left to right.

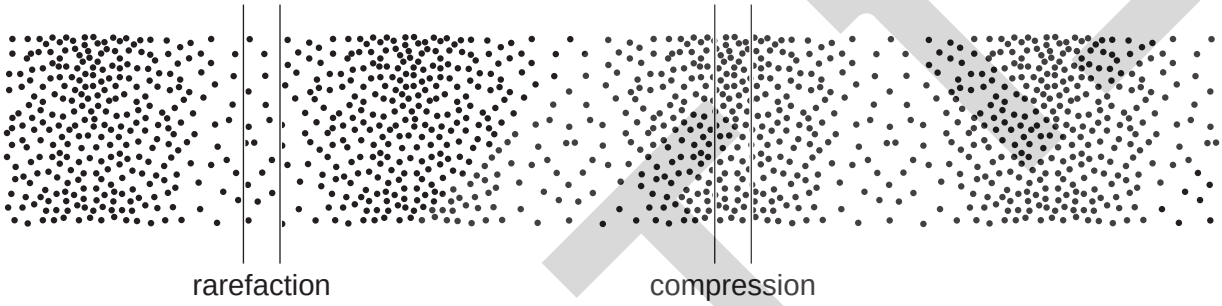

A quieter sound of the same frequency is made.

What will happen to the number of particles in a region of rarefaction and in a region of compression?

	number of particles in region of rarefaction	number of particles in region of compression
A	decrease	decrease
B	decrease	increase
C	increase	decrease
D	increase	increase

www.root19.com +91 - 9969 353 391

29 The diagrams show three different metal rods P, Q and R, inside coils of wire.

Small iron nails are placed on a wooden bench under the rods.

Diagram 1 shows the situation when there are electric currents in the wires.

Diagram 2 shows the situation when the currents are switched off.

diagram 1

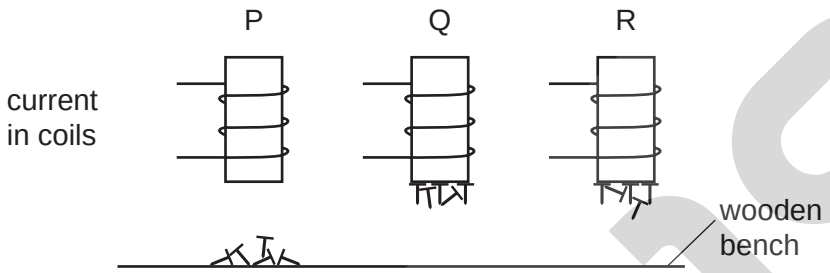

diagram 2

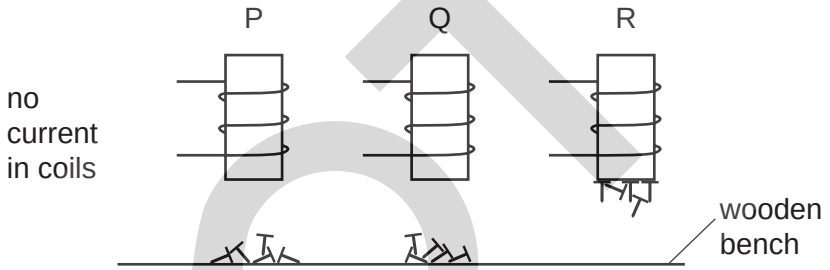

Which row correctly identifies the metal rods?

	P	Q	R
A	copper	soft iron	steel
B	soft iron	copper	steel
C	steel	soft iron	copper
D	copper	steel	soft iron

© UCLES 2020
www.root19.com

+91 - 9969 353 591

30 Which row describes conventional current and electron flow in a circuit containing a cell?

	conventional current	electron flow
A	from the negative terminal of the cell to the positive terminal of the cell	from the negative terminal of the cell to the positive terminal of the cell
B	from the negative terminal of the cell to the positive terminal of the cell	from the positive terminal of the cell to the negative terminal of the cell
C	from the positive terminal of the cell to the negative terminal of the cell	from the negative terminal of the cell to the positive terminal of the cell
D	from the positive terminal of the cell to the negative terminal of the cell	from the positive terminal of the cell to the negative terminal of the cell

31 A student makes four resistors using different pieces of wire. The wires have different diameters and lengths. All the pieces of wire are made of the same material.

Which piece of wire will make the resistor with the largest resistance?

	diameter / mm	length / cm
A	0.8	10
B	0.8	17
C	2.0	10
D	2.0	17

32 A student is to determine the resistance of resistor R. She uses a circuit including a voltmeter and an ammeter.

Which circuit should be used?

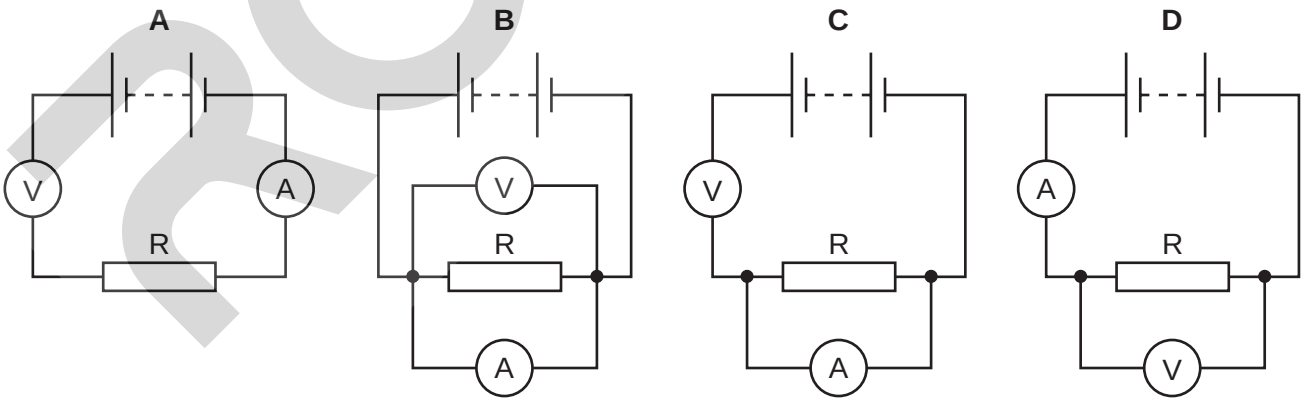

33 The diagram shows a battery connected to two resistors. Three ammeters M_1, M_2 and M_3 are connected in the circuit.

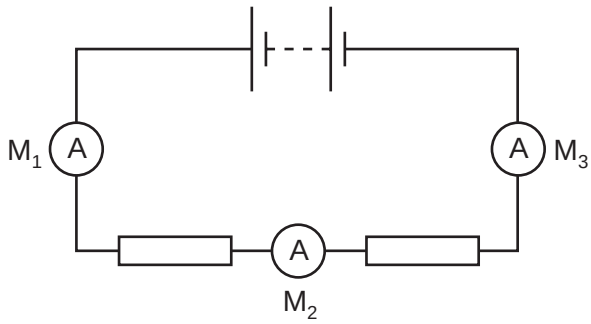

Ammeter M_1 reads 1.0 A.

What are the readings on M_2 and on M_3?

	reading on M_2 / A	reading on M_3 / A
A	0.0	0.0
B	0.5	0.5
C	0.5	1.0
D	1.0	1.0

34 A cell is connected to a parallel combination of a 2.0 Ω resistor and a 4.0 Ω resistor. The current in the 4.0 Ω resistor is 1.0 A.

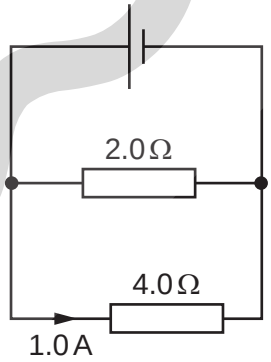

What is the current in the cell?

A 1.0 A **B** 1.5 A **C** 2.0 A **D** 3.0 A

www.root19.com +91 - 9969 353 591

35 The two inputs of a NAND gate are joined together.

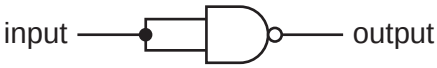

Which truth table represents the action of this gate?

A

input	output
0	0
1	0

B

input	output
0	1
1	0

C

input	output
0	0
1	1

D

input	output
0	1
1	1

36 The diagram shows a transformer that has an output voltage of 12 V.

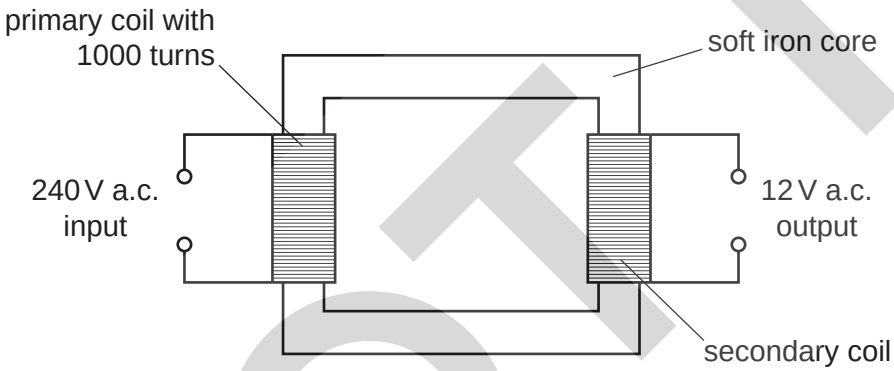

How many turns of wire are in the secondary coil?

A 12 **B** 20 **C** 50 **D** 20 000

www.root19.com +91 - 9969 353 391

37 The diagrams show different particles moving through a magnetic field.

Which particle experiences a magnetic force acting up out of the plane of the paper?

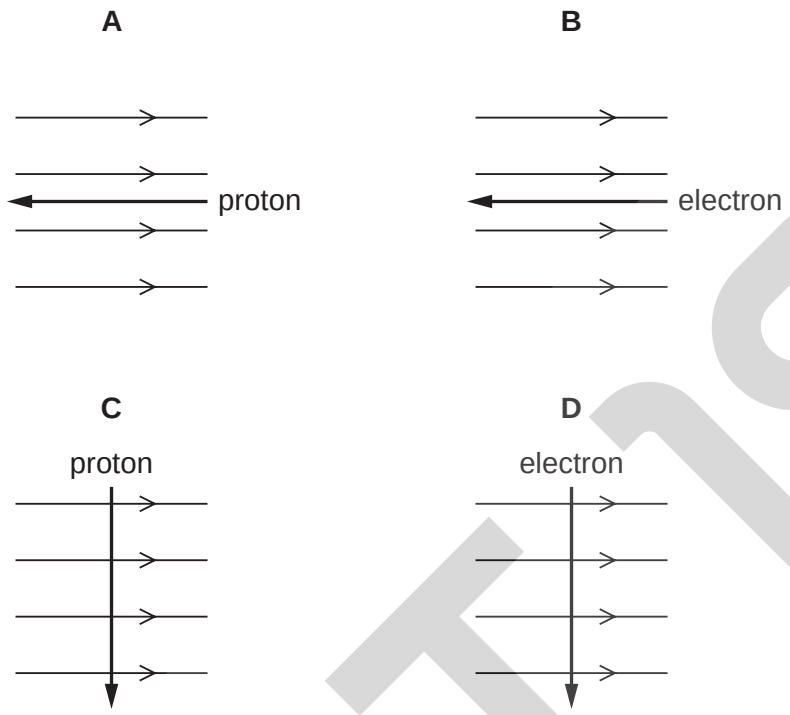

38 When Rutherford bombarded thin gold foil with α-particles, he found that some α-particles were deflected through large angles.

Which statement explains this deflection?

A Most of the atom consists of empty space.

B All of the positive charge and most of the mass of the gold atom are concentrated in a small volume.

C Positive charge in the gold atom is spread evenly throughout the atom.

D All of the negative charge is concentrated at its centre.

© UCLES 2020
www.root19.com

+91 - 9969 353 591

39 The diagram shows the path followed by α-particles as they pass between two charged plates. They are deflected downwards.

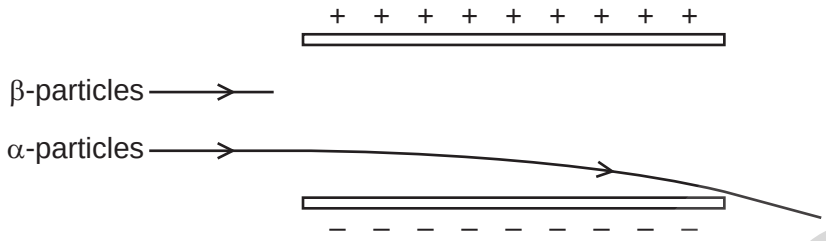

What happens to β-particles passing through the same electric field?

A They are deflected downwards more than the α-particles.

B They are deflected upwards.

C They are not deflected at all.

D They are deflected downwards by the same amount as the α-particles.

40 The graph shows the count rate from a radioactive source over a period of time.

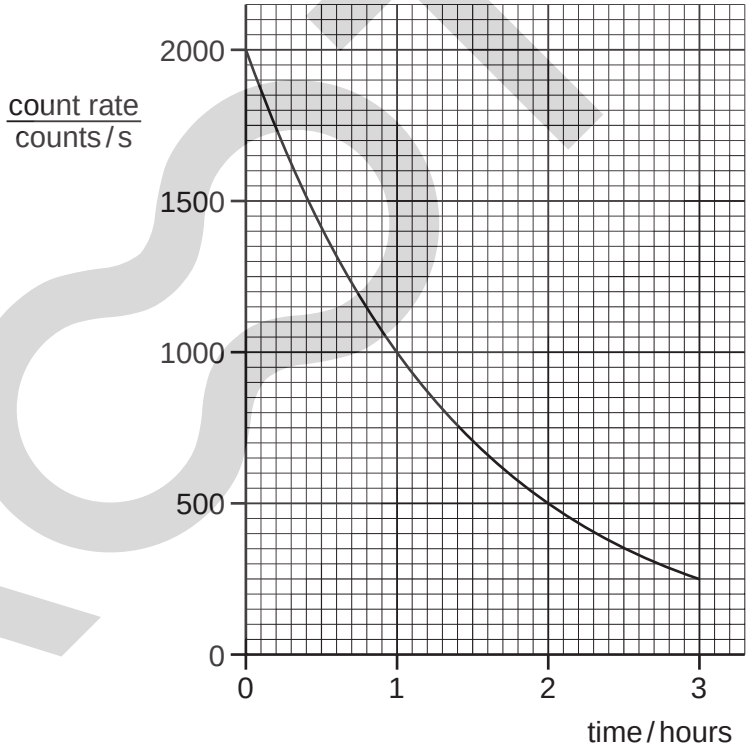

What is the half-life of the source?

A 0.5 hour **B** 1.0 hour **C** 1.5 hours **D** 3.0 hours

Permission to reproduce items where third-party owned material protected by copyright is included has been sought and cleared where possible. Every reasonable effort has been made by the publisher (UCLES) to trace copyright holders, but if any items requiring clearance have unwittingly been included, the publisher will be pleased to make amends at the earliest possible opportunity.

To avoid the issue of disclosure of answer-related information to candidates, all copyright acknowledgements are reproduced online in the Cambridge Assessment International Education Copyright Acknowledgements Booklet. This is produced for each series of examinations and is freely available to download at www.cambridgeinternational.org after the live examination series.

Cambridge Assessment International Education is part of the Cambridge Assessment Group. Cambridge Assessment is the brand name of the University of Cambridge Local Examinations Syndicate (UCLES), which itself is a department of the University of Cambridge.

www.root19.com +91 - 9969 353 391